MITSUBISHI

Loop Control Module

User's Manual

(Hardware)

Q62HLC

Thank you for purchasing the Mitsubishi general-purpose programmable controller MELSEC-Q series.

Prior to use, please read this manual thoroughly and familiarize yourself with the product.

MELSEC-Q

Mitsubishi
Programmable Controller

MODEL	Q62HLC-U-HW
MODEL CODE	13JP75
IB(NA)-0800319-C(0802)MEE	

● SAFETY PRECAUTIONS ●

(Read these precautions before using.)

When using Mitsubishi equipment, thoroughly read this manual and the associated manuals introduced in this manual. Also pay careful attention to safety and handle the module properly.
These SAFETY PRECAUTIONS classify the safety precautions into two categories: "DANGER" and "CAUTION".

⚠DANGER	Procedures which may lead to a dangerous condition and cause death or serious injury, if not carried out properly.
⚠CAUTION	Procedures which may lead to a dangerous condition and cause superficial to medium injury, or physical damage only, if not carried out properly.

Depending on circumstances, procedures indicated by ⚠**CAUTION** may also be linked to serious results.
In any case, it is important to follow the directions for usage.

Store this manual in a safe place so that you can take it out and read it whenever necessary. Always forward it to the end user.

[DESIGN PRECAUTIONS]

⚠DANGER

- Do not write data to the "read-only area" in the buffer memory of the intelligent function module.
  Do not turn on/off the "reserved" signals among the I/O signals to/from the programmable controller CPU.
  Doing so can malfunction the programmable controller system.
- An abnormal output may occur depending on failure of the output element or that of the internal circuit. Install external monitoring circuitry for output signals that may lead to major accidents.

⚠CAUTION

- Do not bunch the control wires or communication cables with the main circuit or power wires, or install them close to each other.
  They should be installed 100 mm(3.94 inch) or more from each other.
  Not doing so could result in noise that may cause malfunction.
- During the power supply ON/OFF, current may run instantaneously from the output terminal.
  Wait and see whether the analog output is constant, then start the control.

[INSTALLATION PRECAUTIONS]

⚠CAUTION

- Use the programmable controller in an environment that meets the general specifications contained in the CPU user's manual.
  Using this programmable controller in an environment outside the range of the general specifications may cause electric shock, fire, malfunction, and damage to or deterioration of the product.
- When installing the module, securely insert the module fixing tabs into the mounting holes of the base module while pressing the installation lever located at the bottom of the module downward.
  Improper installation may result in malfunction, breakdown or the module coming loose and dropping. Securely fix the module with screws if it is subject to vibration during use.
- Tighten the screws within the range of specified torque.
  If the screws are loose, it may cause the module to fallout, short circuits, or malfunction. If the screws are tightened too much, it may cause damage to the screw and/or the module, resulting in fallout, short circuits or malfunction.
- Be sure to shut off all phases of the external power supply used by the system before mounting or removing the module.
  Not doing so may cause electric shock or damage to the module.
  In the system where a CPU module supporting the online module change is used and on the MELSECNET/H remote I/O stations, modules can be replaced online (during energizing). However, there are some restrictions on replaceable modules and the replacement procedures are predetermined for each module.
  For details, refer to the chapter of the online module change in Loop Control Module User’s Manual.
- Do not directly touch the conductive area or electronic components of the module. Doing so may cause malfunction or failure in the module.

[WIRING PRECAUTIONS]

⚠CAUTION

- Be careful not to let foreign matters such as sawdust or wire chips get inside the module.
  They may cause fires, failure or malfunction.
- The top surface of the module is covered with protective film to prevent foreign objects such as cable offcuts from entering the module when wiring. Do not remove this film until the wiring is complete.
  Before operating the system, be sure to remove the film to provide adequate heat ventilation.
- Be sure to fix communication cables or power supply cables leading from the module by placing them in the duct or clamping them.
  Cables not placed in the duct or without clamping may hang or shift, allowing them to be accidentally pulled, which may cause a module malfunction and cable damage.

[WIRING PRECAUTIONS]

⚠CAUTION

- Do not grab on the cable when removing the communication or power cable connected to the module.
  When disconnecting a cable without a connector, first loosen the screws on the part that is connected to the module.
  Pulling the cable when it is still connected to the module may cause damage to the module or cable, or misoperation due to cable contact failure.
- Always ground the FG terminal and the shielded cable for the programmable controller.
  There is a risk of electric shock or malfunction.
- When turning on the power and operating the module after wiring is completed, always attach the terminal cover that comes with the product.
  There is a risk of electric shock if the terminal cover is not attached.
- Use applicable solderless terminals and tighten them with the specified torque. If any solderless spade terminal is used, it may be disconnected when the terminal screw comes loose, resulting in failure.
- When wiring, be sure to verify the rated voltage of the product as well as the terminal layout. Fire or failure may result if incorrect voltage is input or incorrect wiring is performed.
- Connecting terminals with incorrect voltage may result in malfunction or mechanical failure.

REVISIONS

＊ The manual number is given on the bottom right of the top cover.

Print Date	＊ Manual Number	Revision
Oct., 2005	IB (NA)-0800319-A	First edition
Nov., 2007	IB (NA)-0800319-B	PARTIAL CORRECTION SAFETY PRECAUTIONS, Section 2.2, Chapter 4, Chapter 5
Feb., 2008	IB (NA)-0800319-C	PARTIAL CORRECTION SAFETY PRECAUTIONS, Conformation to the EMC Directive and Low Voltage Instruction, Section 2.1, 2.2, 2.3, 2.4, 3.1, Chapter 6

CONTENTS

About the Manuals

The following manuals are related to this product.
Referring to this list, please request the necessary manuals.

Detailed Manual

Manual Name	Manual Number (Model Code)
Loop Control Module User's Manual	SH-080573ENG (13JR85)

Conformation to the EMC Directive and Low Voltage Instruction

(1) About sequence system
When incorporating the Mitsubishi programmable controller into other machinery or equipment and keeping compliance with the EMC and low voltage directives, refer to Chapter 9, "EMC Directive and Low Voltage Instruction" of the QCPU User's Manual (Hardware Design, Maintenance and Inspection).
The CE logo is printed on the rating plate of the programmable controller, indicating compliance with the EMC and low voltage directives.

(2) About this product
The following wiring is required for conformance of this product with the EMC Directive and Low Voltage Directive.

(a) Use shielded cables for all external wiring and use the AD75CK cable clamp to ground this product to an enclosure.

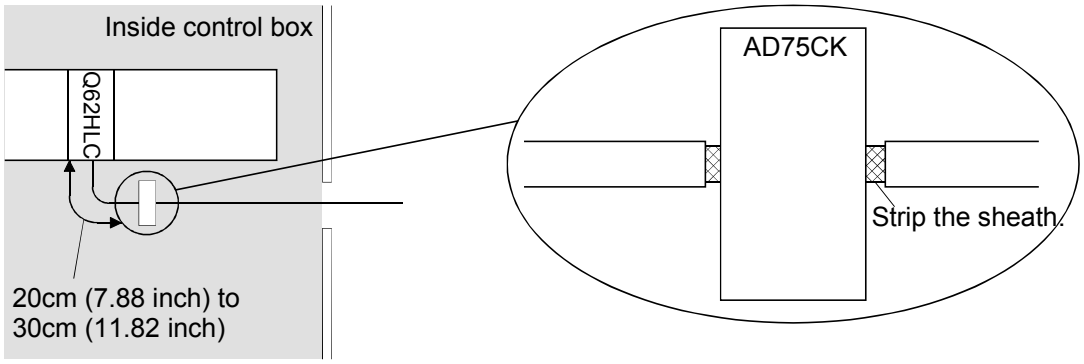

(b) Using the AD75CK, you can tie four cables of about 7mm outside diameter together for grounding.

1. OVERVIEW

This user's manual provides the specifications, handling, part names and others of the following loop control modules (hereafter abbreviated to the Q62HLC) used with the MELSEC-Q series CPU modules.

• Q62HLC loop control module

2. SPECIFICATIONS

The specifications of the Q62HLC are indicated below.

2.1 Performance Specifications

Item			Specifications
Analog I/O points			2 channels/module
Specification for analog input *2			
Input points			2 points (2 channels)
Analog input			Refer to Section 2.2
Digital output			16-bit signed binary
Applicable thermocouple			K,J,T,S,R,N,E,B,PL II,W5Re/W26Re
Input characteristic			Refer to Section 2.2
Maximum resolution			Refer to Section 2.2
Accuracy *1	Indication accuracy	Ambient temperature: 23°C ±2°C	Refer to Section 2.3
		Ambient temperature: 0°C to 55°C	Refer to Section 2.3
	Cold junction temperature compensation accuracy	Ambient temperature: 23°C ±2°C	±0.5°C
		Ambient temperature: 0°C to 55°C	±1.0°C
Conversion speed			25ms/2 channels (Stable regardless of the number of used channels)
Sampling period			25ms/2 channels (Stable regardless of the number of used channels)
Absolute maximum input			Micro voltage: ±12V,Voltage: ±15V,Current: ±30mA
Input impedance			Thermocouple, Micro voltage, Voltage:1MΩ,Current:250Ω
Normal mode rejection ratio			60dB or more (50/60Hz)
Common mode refection ratio			120dB or more (50/60Hz)
Input filter (primary delay digital filter)			0.0 to 100.0s (0: Input filter OFF)
Sensor compensation value setting			Thermocouple: -500.0 to 500.0°C Micro voltage, Voltage, Current: -50.00 to 50.00%
Operation at input disconnection			Refer to Section 2.4

Item		Specifications
Specification for analog output *2		
Output points		2 points (2 channels)
Digital input		16-bit signed binary
Analog output		Current
Output characteristic		Digital input value: 0 to 1000 (When using simplified analog output 0 to 4000), Output range:4 to 20mA
Maximum resolution		4μA
Output accuracy	Ambient temperature: 23°C ±2°C	Full scale × (±0.2%)
	Ambient temperature: 0°C to 55°C	Full scale × (±0.4%)
Conversion speed		25ms/2 channels (Stable regardless of the number of used channels)
Allowable load resistance		600Ω or less
Output impedance		5MΩ

*1: Calculation the accuracy in the following method.
(Accuracy) = (Indicated accuracy) + (Cold junction temperature compensation accuracy)
e.g.) Accuracy when measuring a temperature in the following conditions:
- Input sensor used: Thermocouple T type (-200 to 400℃) (Select "2" at input range setting.)
- Operating ambient temperature : 35℃
- Temperature measurement value : 300℃

The accuracy values will become as follows from the above conditions
- Indicated accuracy : ±1.0℃ (Value shown in the table of Section 2.3 (2))
- Cold junction compensation temperature accuracy : ±1.0℃ (Value shown in the table of Section 2.1)

Accuracy = (±1.0℃)+(±1.0℃)=±2.0℃

*2: This indicates the specifications for analog input/output when using as a simplified analog input/output function.

Item		Specifications
Control method		Continuous proportional control
PID constant range	PID constant setting	Auto tuning setting available
	Proportional band (P)	Thermocouple: 0.1 to Full-scale °C Micro voltage, Voltage, Current: 0.1 to 1000.0%
	Integral time (I)	0.0 to 3276.7s
	Derivative time (D)	0.0 to 3276.7s
Set value setting range		Thermocouple: Input range of thermocouple to use Micro voltage, Voltage, Current: Set input range
Dead band setting range		Thermocouple: 0.0 to 100.0°C Micro voltage, Voltage, Current: 0.00 to 10.00%
Time accuracy		±0.2%
Insulation		Insulation part: Between input and earth; Insulation method: Transformer insulation; Dielectric withstand voltage: 500VAC for 1 minute; Insulation resistance: 500VDC 20MΩ or more Insulation part: Between input channels; Insulation method: Transformer insulation; Dielectric withstand voltage: 500VAC for 1 minute; Insulation resistance: 500VDC 20MΩ or more
FeRAM read/write count		Max. 10^{10} times
Number of occupied I/O points		16 points/slot (I/O assignment:16 intelligent points)
Connection terminal		18-point terminal block
Applicable wire size		0.3 to 0.75 mm^2
Applicable crimping terminal		R1.25-3, RAV1.25-3
External power supply		24 VDC +20%, -15%
		Ripple, spike 500mV$_{P-P}$ or less
		Inrush current: 0.2A, 4ms or less
		0.07A
Internal current consumption		0.27A
Weight		0.25kg
External dimensions		27.4[1.08](W)×98[3.86](H)×112[4.41](D) mm[in.]

2.2 Types, Measured Ranges and Data Resolutions of Usable Input Sensors

Input		Input range	Digital value	Data resolution
Thermocouple	K	-200 to 1372°C	-2000 to 13720	0.1°C
	J	-200 to 1200°C	-2000 to 12000	
	T	-200 to 400°C	-2000 to 4000	
	S	-50 to 1768°C	-500 to 17680	
	R	-50 to 1768°C	-500 to 17680	
	N	0 to 1300°C	0 to 13000	
	E	-200 to 1000°C	-2000 to 10000	
	B	0 to 1800°C	0 to 18000	
	PL II	0 to 1390°C	0 to 13900	
	W5Re/W26Re	0 to 2300°C	0 to 23000	
Micro voltage		0 to 10mV	0 to 20000	0.5μV
		0 to 100mV		5μV
		-10 to 10mV	-10000 to 10000	1μV
		-100 to 100mV		10μV
Voltage		0 to 1V	0 to 20000	0.05mV
		1 to 5V		0.2mV
		0 to 5V		0.25mV
		0 to 10V		0.5mV
		-1 to 1V	-10000 to 10000	0.1mV
		-5 to 5V		0.5mV
		-10 to 10V		1mV
Current		4 to 20mA	0 to 20000	0.8μA
		0 to 20mA		1μA

2.3 Indicated Accuracy for Ambient Temperature

(1) Ambient temperature 23±2°C

Item		Error	
Thermocouple	K,J,T,E,PL II	Less than -100°C	±1.0°C
		-100 to less than 500°C	±0.5°C
		500°C or more	± (indicated value×(0.1%)+1digit)
	S,R,N, W5Re/W26Re	-50 to less than 1000°C	±1.0°C
		1000°C or more	± (indicated value×(0.1%)+1digit)
	B	Less than 400°C	±70.0°C
		400 to less than 1000°C	±1.0°C
		1000°C or more	± (indicated value×(0.1%)+1digit)
Micro voltage		Full-scale×(±0.1%)	
Voltage			
Current			

(2) Ambient temperature 0 to 55°C

Item		Error	
Thermocouple	K,J,T,E,PL II	Less than -100°C	±2.0°C
		–100 to less than 500°C	±1.0°C
		500°C or more	± (indicated×(0.2%)+1digit)
	S,R,N, W5Re/W26Re	–50 to less than 1000°C	±2.0°C
		1000°C or more	± (indicated×(0.2%)+1digit)
	B	Less than 400°C	±140.0°C
		400 to less than 1000°C	±2.0°C
		1000°C or more	± (indicated×(0.2%)+1digit)
Micro voltage		Full-scale × (±0.2%)	
Voltage			
Current			

2.4 Operation at Input Disconnection

Input	Input range	Operation
Thermocouple	All	Up scale *1
Micro voltage		
Voltage	1 to 5V	Down scale *2
	0 to 1V,-1 to 1V,0 to 5V,-5 to 5V, 0 to 10V,-10 to 10V	Value near 0V is displayed *3
Current	4 to 20mA	Down scale
	0 to 20mA	Value near 0mA is displayed *3

*1: "Input range upper limit value + (full scale ×5%)" is displayed)
*2: "Input range lower limit value -(full scale ×5%)" is displayed)
*3: In this case, as the measurement value is within input range, channels not even connected do not occur alarm.

REMARKS

If detection of an error is required, make sure to set the range actually to use so that a value near 0V/0mA is not displayed.
(Example)
When using voltage input of 0 to 5V range, set the input range actually to use to a range of 1 to 4V.

3. LOADING AND INSTALLATION

3.1 Handling Instructions

There are the following instructions for handling the Q62HLC.

(1) Do not drop the case and connectors of the module and subject them to hard impact.

(2) Tighten the module fixing screws and terminal screws of the module within the following ranges.

Screw Location	Tightening Torque Range
Module fixing screw (M3 screw)	0.36 to 0.48N•m
Terminal block terminal screw (M3 screw)	0.42 to 0.58N•m
Terminal block mounting screw (M3.5 screw)	0.66 to 0.89N•m
FG terminal screw (M3 screw)	0.42 to 0.58N•m

3.2 Installation Environment

Refer to the user's manual of the CPU module used.

4. NAMES AND SETTINGS OF THE PARTS

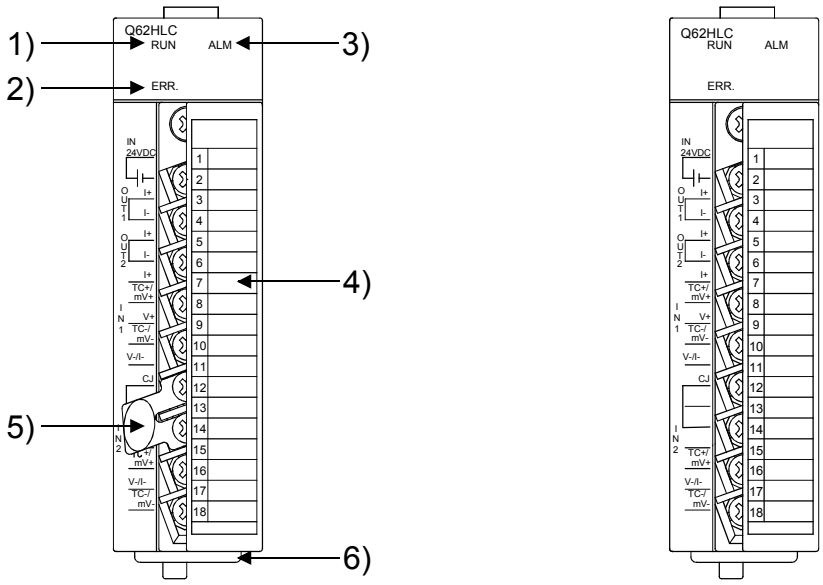

[Condition without temperature compensation resistor]

Number	Name and Appearance	Description
1)	RUN LED	Indicates the operating status of the Q62HLC. On : Operating normally. Off : 5V power switched off, a watchdog timer error occurred, or changing online module is allowed.
2)	ERR. LED	Indicates the error status of the Q62HLC. On : Hardware fault (Includes the case of cold junction temperature compensation resistance is not connected) Flicker: Write data error occurrence At auto turning error completion Off : Operating normally.
3)	ALM LED	Indicates the alarm status of the Q62HLC. On : Alarm occurrence Flicker: Process value (PV) is outside the measured temperature range. Loop wire break was detected. Sensor is not connected. *1 Off : No alarm occurrence
4)	Terminal block	Terminal blocks are used for various sensor input, current output and external power supply input.
5)	Cold junction temperature compensation resistor	Used for Cold junction temperature compensation.
6)	FG terminal	For frame ground.

*1: The detection may not be made depending on the input range to use. Refer to Section 2.4 for details.

(1) Terminal number and signal number

Terminal Number	Signal Number		Content	
1	24VDC +		24VDC + external power supply for current output	
2	24VDC -		24VDC - external power supply for current output	
3	OUT1	I+	CH1	Current output +
4		I-		Current output -
5	OUT2	I+	CH2	Current output +
6		I-		Current output -
7	IN1	I+	CH1	Current input +
8		TC+/mV+		Thermocouple/micro voltage input+
9		V+		Voltage input +
10		TC-/mV-		Thermocouple/micro voltage input -
11		V-/I-		Voltage/Current input -
12	CJ		Cold junction temperature compensation resistor	
13	IN2	I+	CH2	Current input +
14	CJ		Cold junction temperature compensation resistor	
15	IN2	V+	CH2	Voltage input +
16		TC+/mV+		Thermocouple/micro voltage input +
17		V-/I-		Voltage/Current input -
18		TC-/mV-		Thermocouple/micro voltage input -

5. WIRING

5.1 Wiring Instructions

(1) Use separate cables for the AC control circuit and Q62HLC's external input output signals to avoid the influence of AC side surges and inductions.

(2) Do not run the module cables near, or bundle them with, the main circuit and high-voltage cables and the load cables from other than the programmable controller.
Always place the temperature and the micro voltage signal lines more than 100mm (3.94inch) away from the main circuit cables and AC control circuit.
Fully keep the sensors away from high-voltage cables and circuits which include high frequencies, e.g. inverter's main load circuit.
Not doing so can make the sensors more susceptible to noises, surges and inductions.

(3) Earth the shielded wire or shielded cable to FG of the programmable controller.
However, depending on the external noise conditions, external earthing may be recommended.

(4) For details on making the wiring conform to the EMC directive and low voltage instruction, please refer to [Conformation to EMC Directive and Low Voltage Instruction] of this manual.

5.2 External Wiring

(1) Input

(a) For the thermocouple input

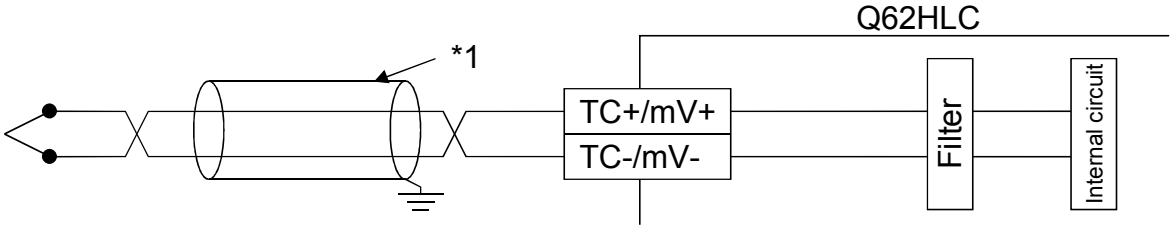

(b) For the micro voltage input

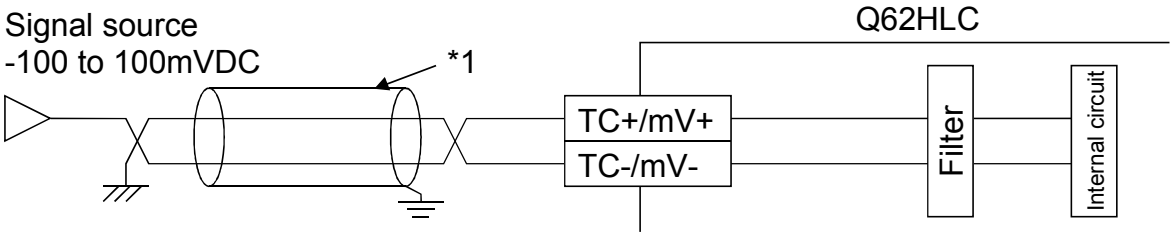

(c) For the voltage input

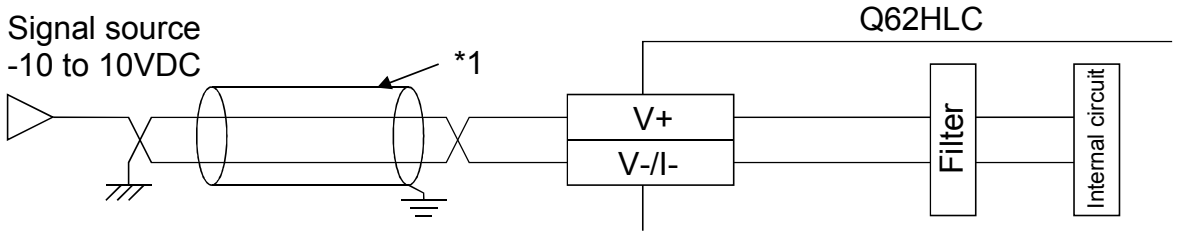

(d) For the current input

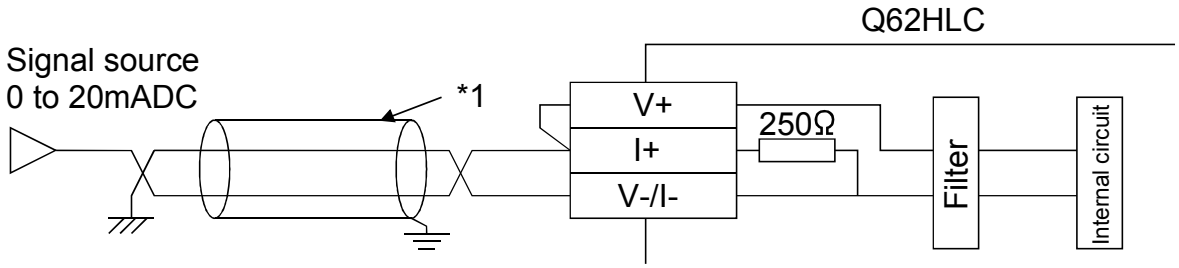

(2) Output

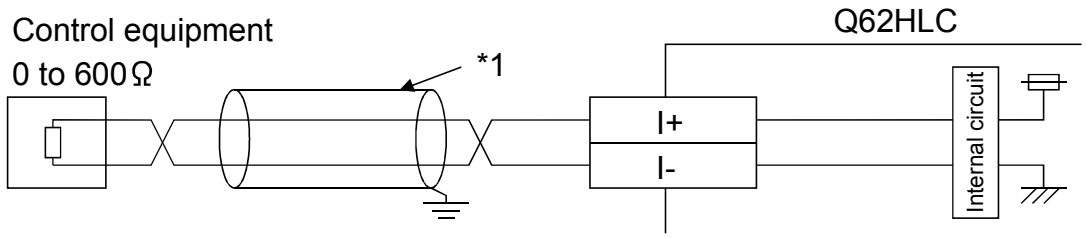

(3) External power supply

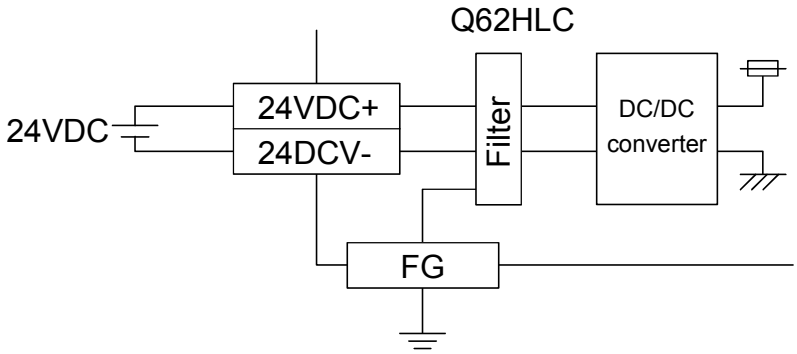

*1: Always use shielded wires for cables.

6. SETTING FROM GX Developer

The Q62HLC allows you to set the output status at an error stop of the programmable controller CPU by making the intelligent function module switch setting.
Make the intelligent function module switch setting using the I/O assignment setting of GX Developer.
You can make setting easily by entering hexadecimal numbers into 4 digits.

	Setting Item	
Switch 1	CH4 CH3 CH2 CH1 H	Output setting at CPU stop error 0 : CLEAR Other than 0 : HOLD
Switch 2 *1	Control status at shifting to program control 1 : Shift with executing control Other than 1 : Shift with suspending control	
Switch 3	Use prohibited (0, fixed)	
Switch 4	Use prohibited (0, fixed)	
Switch 5	Use prohibited (0, fixed)	

*1: Compatible with the Q62HLC of which the first five digits of the production information is "10022" or later or the first five digits of the product information is "10011" or later. (For the method of confirming the production information and product information, refer to the Loop Control Module User's Manual.)
When using the Q62HLC which is not compatible with this setting, set 0.

If the switches for the intelligent function module are not set, the default value of 0 is used for switches 1 to 5.

7. EXTERNAL DIMENSIONS

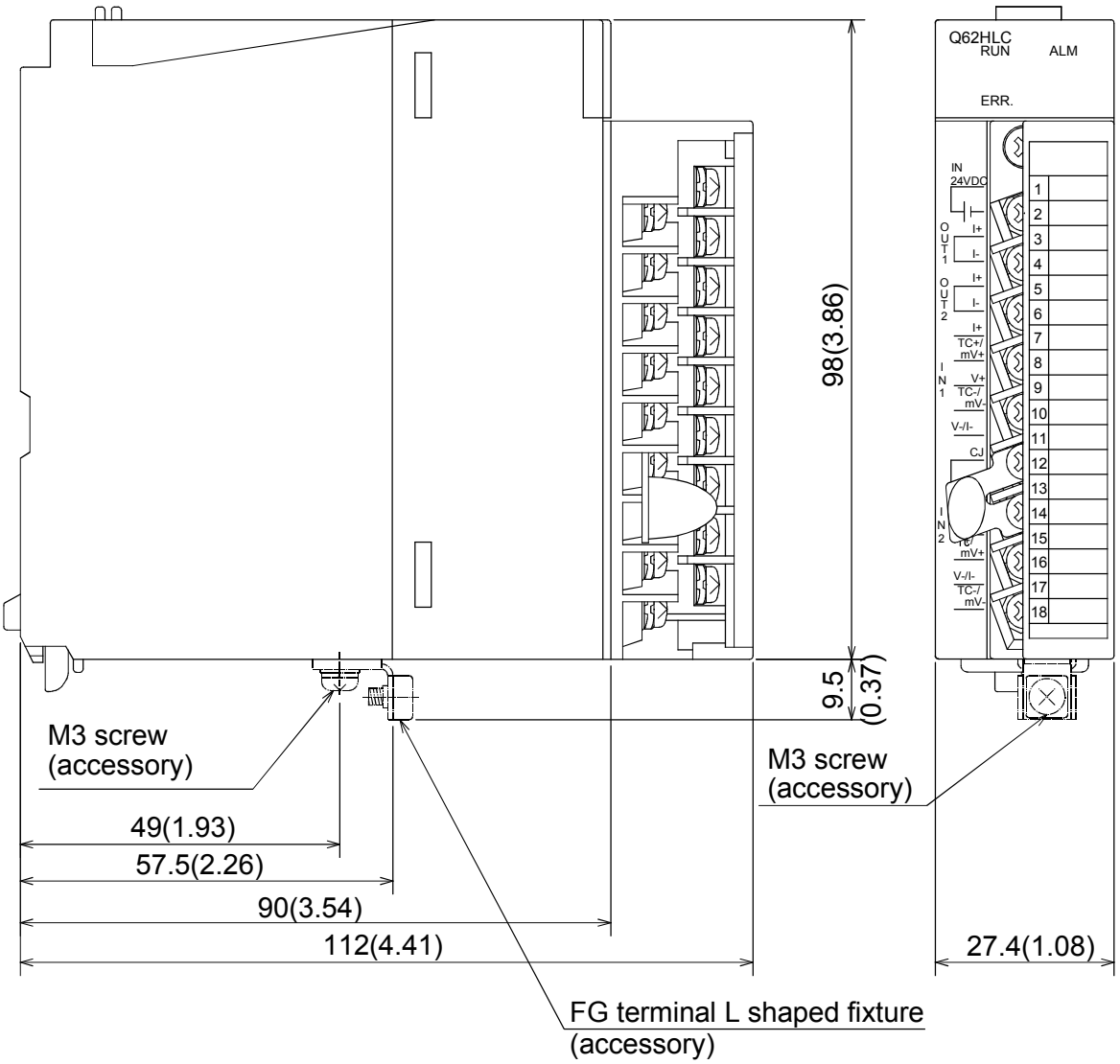

Unit: mm (inch)

Warranty

Mitsubishi will not be held liable for damage caused by factors found not to be the cause of Mitsubishi; machine damage or lost profits caused by faults in the Mitsubishi products; damage, secondary damage, accident compensation caused by special factors unpredictable by Mitsubishi; damages to products other than Mitsubishi products; and to other duties.

⚠For safe use

- This product has been manufactured as a general-purpose part for general industries, and has not been designed or manufactured to be incorporated in a device or system used in purposes related to human life.
- Before using the product for special purposes such as nuclear power, electric power, aerospace, medicine or passenger movement vehicles, consult with Mitsubishi.
- This product has been manufactured under strict quality control. However, when installing the product where major accidents or losses could occur if the product fails, install appropriate backup or failsafe functions in the system.

Country/Region	Sales office/Tel
U.S.A	Mitsubishi Electric Automation Inc. 500 Corporate Woods Parkway Vernon Hills, IL 60061, U.S.A. Tel : +1-847-478-2100
Brazil	MELCO-TEC Rep. Com.e Assessoria Tecnica Ltda. Rua Correia Dias, 184, Edificio Paraiso Trade Center-8 andar Paraiso, Sao Paulo, SP Brazil Tel : +55-11-5908-8331
Germany	Mitsubishi Electric Europe B.V. German Branch Gothaer Strasse 8 D-40880 Ratingen, GERMANY Tel : +49-2102-486-0
U.K	Mitsubishi Electric Europe B.V. UK Branch Travellers Lane, Hatfield, Hertfordshire., AL10 8XB, U.K. Tel : +44-1707-276100
Italy	Mitsubishi Electric Europe B.V. Italian Branch Centro Dir. Colleoni, Pal. Perseo-Ingr.2 Via Paracelso 12, I-20041 Agrate Brianza., Milano, Italy Tel : +39-039-60531
Spain	Mitsubishi Electric Europe B.V. Spanish Branch Carretera de Rubi 76-80, E-08190 Sant Cugat del Valles, Barcelona, Spain Tel : +34-93-565-3131
France	Mitsubishi Electric Europe B.V. French Branch 25, Boulevard des Bouvets, F-92741 Nanterre Cedex, France TEL: +33-1-5568-5568
South Africa	Circuit Breaker Industries Ltd. Private Bag 2016, ZA-1600 Isando, South Africa Tel : +27-11-928-2000
Hong Kong	Mitsubishi Electric Automation (Hong Kong) Ltd. 10th Floor, Manulife Tower, 169 Electric Road, North Point, Hong Kong Tel : +852-2887-8870
China	Mitsubishi Electric Automation (Shanghai) Ltd. 4/F Zhi Fu Plazz, No.80 Xin Chang Road, Shanghai 200003, China Tel : +86-21-6120-0808
Taiwan	Setsuyo Enterprise Co., Ltd. 6F No.105 Wu-Kung 3rd.Rd, Wu-Ku Hsiang, Taipei Hsine, Taiwan Tel : +886-2-2299-2499
Korea	Mitsubishi Electric Automation Korea Co., Ltd. 1480-6, Gayang-dong, Gangseo-ku Seoul 157-200, Korea Tel : +82-2-3660-9552
Singapore	Mitsubishi Electric Asia Pte, Ltd. 307 Alexandra Road #05-01/02, Mitsubishi Electric Building, Singapore 159943 Tel : +65-6470-2460
Thailand	Mitsubishi Electric Automation (Thailand) Co., Ltd. Bang-Chan Industrial Estate No.111 Moo 4, Serithai Rd, T.Kannayao, A.Kannayao, Bangkok 10230 Thailand Tel : +66-2-517-1326
Indonesia	P.T. Autoteknindo Sumber Makmur Muara Karang Selatan, Block A/Utara No.1 Kav. No.11 Kawasan Industri Pergudangan Jakarta - Utara 14440, P.O.Box 5045 Jakarta, 11050 Indonesia Tel : +62-21-6630833
India	Messung Systems Pvt, Ltd. Electronic Sadan NO:III Unit No15, M.I.D.C Bhosari, Pune-411026, India Tel : +91-20-2712-3130
Australia	Mitsubishi Electric Australia Pty. Ltd. 348 Victoria Road, Rydalmere, N.S.W 2116, Australia Tel : +61-2-9684-7777

MITSUBISHI ELECTRIC CORPORATION

HEAD OFFICE : TOKYO BUILDING, 2-7-3 MARUNOUCHI, CHIYODA-KU, TOKYO 100-8310, JAPAN
NAGOYA WORKS : 1-14, YADA-MINAMI 5-CHOME, HIGASHI-KU, NAGOYA, JAPAN

When exported from Japan, this manual does not require application to the Ministry of Economy, Trade and Industry for service transaction permission.

Specifications subject to change without notice.
Printed in Japan on recycled paper.